SERMATEC

SMT-100kWh

ALL-IN-ONE ENERGY STORAGE SOLUTION

PRODUCT CATALOGUE

SHANGHAI SERMATEC ENERGY TECHNOLOGY CO.,LTD.

Shanghai Sermatec Energy Technology CO.,LTD.

Website: www.sermatec-ess.com

E-mail: info@sermatec.com.cn

Tel: +86-021-69986891 +86-021-69986096

Add: No. 1388, Xindian Road, Jiading District, Shanghai,China

SMT-100kWh Energy Storage System

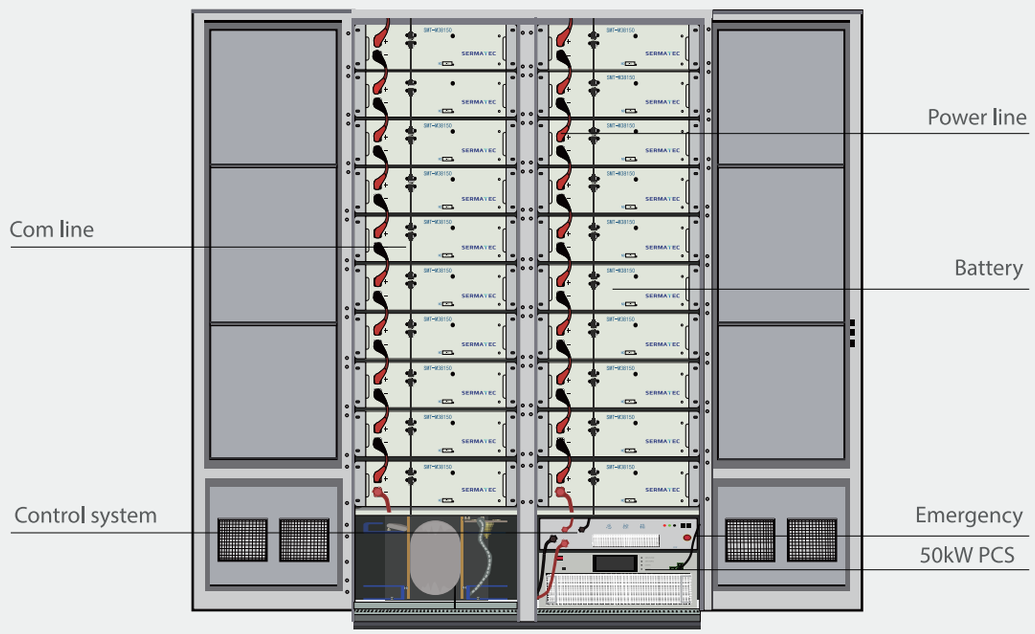

SMT-100kWh Front view

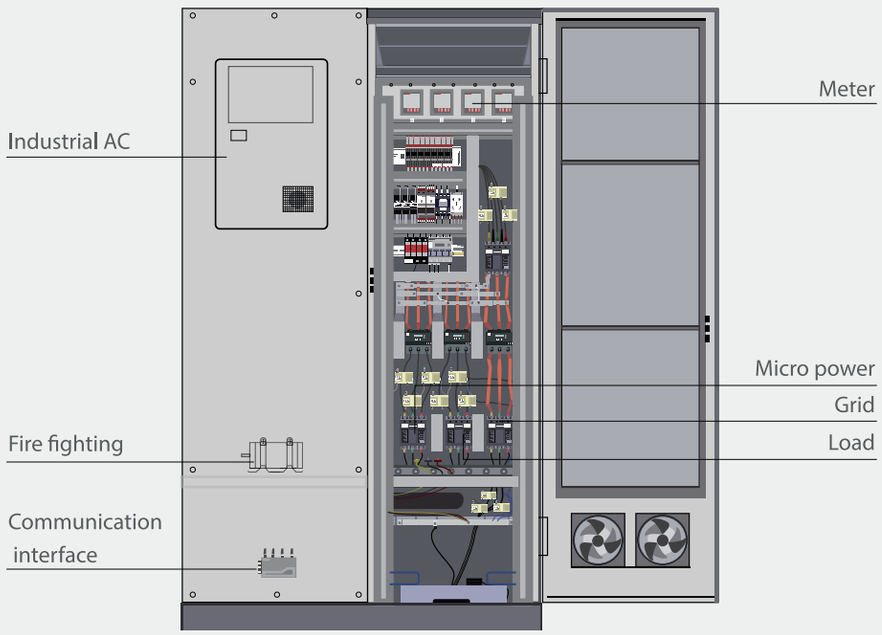

SMT-100kWh Rear view

System composition

Battery module	Consists of PACK assembled with high efficiency、long life span LFP cells in series and parallel, and a number of PACK in series and parallel make RACK.
Control system	Synchronize LFP battery、PCS system、load etc. and drive the system operate stably and efficiently.
PCS (storage inverter)	PCS is the DC-AC/AC-DC converting device, can converter DC into AC, and AC into DC (bi-directional).
Monitoring system	System operation data monitoring、strategy control、history data record、status record etc.

C&I Energy Storage System

- Turnkey solution, provide all-in-one system;
- Life cycle data record, multi safety protection;
- AI control, high efficiency & intelligent;

Sermatec Energy offer high level safety and reliability C&I energy storage solution, one-stop integration of battery module,PCS,control system,fire fighting system,A/C-Air Conditioner system,monitoring system,to effectively charge and discharge power by synergizing all systematic components.

The whole system with plug and play feature, which is easy for transportation,in-stallation and maintenance.

▲ SMT–100kWh

System Topology

Overview

The system adopts AC coupled mini grnd structure, PCS、loads、grid、distributed power source are connected to AC busbar and controlled via 3S energy ecological system. Respond with according control strategy based on application case to securep ower supply safety.

System Topology

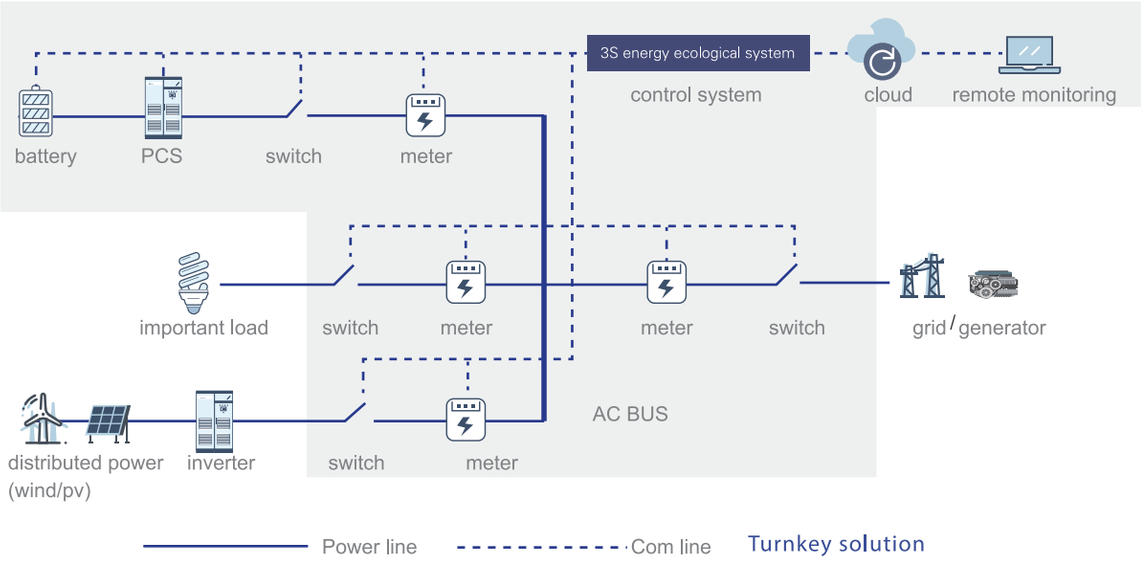

Battery	LiFePO4 (LFP)
PCS	energy storage inverter
Remote	Remote monitoring
Grid	AC grid /diesel generator
Distributed power	On grid pv system, wind system
3S energy ecological system	Battery-oriented control system

System Parameter

Grid	
Voltage range	AC400V±15%，50/60Hz
THD	＜3%
Power factor	-0.9~0.9（adjustable）
Rated charge power	50kW
Rated discharge power	50kW
Storage	
Battery type	Lithium battery
Max chargeable capacity	110kWh
Max dis-chargeable capacity	100kWh
Life cycle	5000
Efficiency	
Max efficiency	＞88%
Max charging efficiency	＞94%
Max discharging efficiency	＞94%
Operation mode	
Peak shifting	Active (default)
Off grid/parallel	Active (default)
Anti-reverse power	Active (optional)
Reactive power regulation	Active (optional)
Demand capacity control	Active (optional)
Grid dispatching interface	Active (optional)
Remote dispatching interface	Active (optional)
Local data backup	Active (optional)
General parameters	
Dimension(w/d/h)	1275*1000*2200mm
Weight	1700kg
Working temperature	0℃~+55℃
Wiring method	Bottom in and out
Relative Humidity	0~95%
Work altitude	3000m（100%ACoutput）
Cooling	Aircon
Protection class	IP54
Environment pollution class	Class1，2，3
Topology structure	Transformer optional
communication	TCP/IP
Compliance	
Connection standard	CQC;UL1741;UL9540;CS22.2;IEC62477;IEC61000;G59;VDE4105;MEA;AS4777;ERAC
Safety	IEC62619;IEC62133;IEC62109-1&-2;IEC624777-1
Transportation compliance	UN38.3

Cell

Overview

Adopt high efficiency LFP cell of 3.2V 50Ah,High safety performance、high density、long cycle.

Data sheet

Nominal capacity	50Ah	1C@25℃
Nominal voltage	3.2V	
Working voltage range	2.5-3.65V	
Rated discharge current	≤50A	Typical value=25A
Peak discharge current	≤110A	
Rated charge current	≤50A	@30s
Peak discharge current	≤100A	Typical value=25A
Use temperature	Charge: 0℃~55℃ Discharge: -20℃~55℃	@30s
Storage temperature	Discharge: -20℃~55℃	
Battery dimension	Depth: 39.5±0.5mm Width: 148.0±0.5mm Shoulder Hight: 95.0±0.5mm Total hight: 101.65±0.5mm	
Anode material	LFP	
Battery weight	1.18±0.03kg	
Energy density	140Wh/kg	
DC internal resistance	≤1.8mΩ	@30s

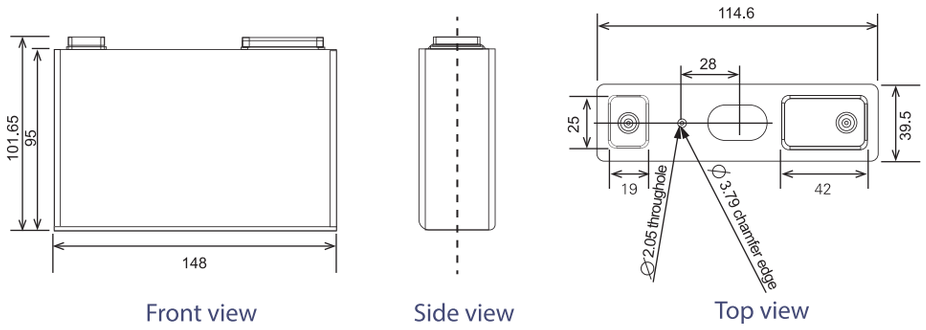

Front view　　Side view　　Top view

Cycle curve（0.5C@25℃）

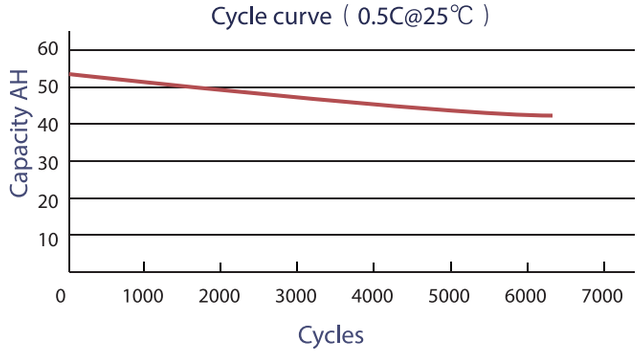

PACK

Overview

Battery module consists of 36 units of 50Ah LFP cell via 3P12S assembly. Cell voltage and temperature, cell balances are collected through BSU control system, to secure whole modules are working effectively and smoothly.

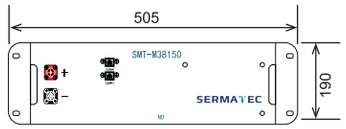

Front view

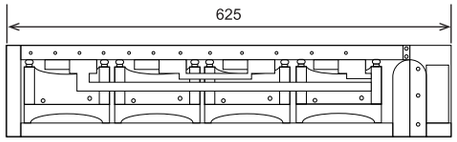

Side view

Data sheet

Module capacity	38.4V 150Ah
Assembly method	3P12S
Rated voltage	38.4
Rated capacity	5760Wh
Rated continuous current	75A（0.5C）
Battery module voltage range	30V~43.8V
Work ambient temperature	Charge：0℃~45℃ Discharge：-20℃~55℃
Module weight	80kg
Module dimension(w*d*h)	505*625*190mm
Cooling	Natrual

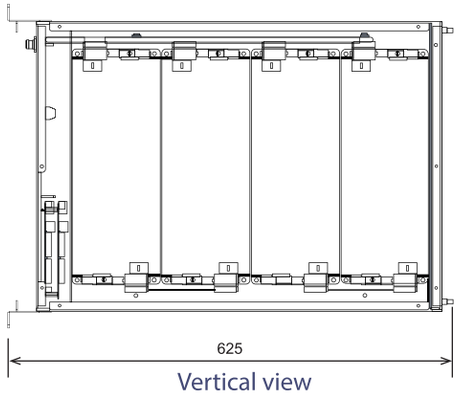

Vertical view

Battery Pack

RACK

Overview

Battery rack consists of 20 racks in series and parallel,connected with inlet of main distribution board, and control whole battery system operation condition through BMC, real time measure rack voltage、current、calculating SOC 、SOH.

Specification

Type	768V 150Ah
Nominal capacity	115.2kWh
Nominal voltage	768V
Max working voltage	876V
Min working voltage	600V
Max charge current	25A
Max discharge current	50A
Dimension(w*d*h)	1200*950*2100mm
Weight	1600kg
Lifespan	＞10years
Cycles	5000
Working temperature	0℃~55℃
Storage temperature	-20℃~60℃
Battery module	SMT-M38150
Module quantity	20 modules

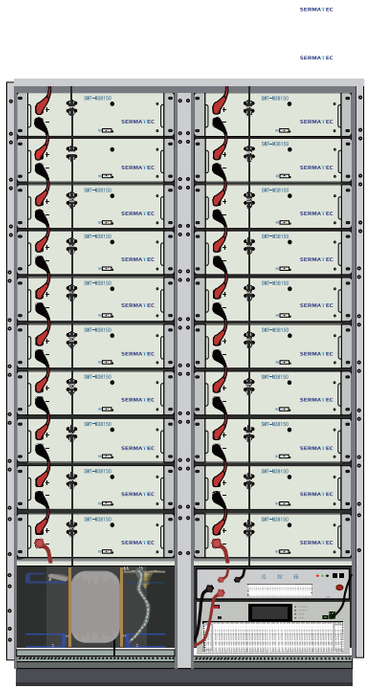

▶ Battery Rack

SMT-100kWh Application

System characteristics

Safety

Intelligent temperature control, secure best temperature environment.
Four levels safety chain structure design.
Life time data backup.
Automatic fire fighting system.

High performance

Ultra-low power consumption
system efficiency≥88%
high performance LFP cell, 5000 cycles @ 80% EOL

Extensible

All in one design, support parallel connection

IP Rate

IP54

Intelligence

One key start、unattended operation、automatic operation
Support multi units parallel connection

Application